Anti-slip tape 100 mm



TECHNICAL SPECIFICATIONS

Overall width (B)	100 mm
Length	18300 mm

DIMENSIONS

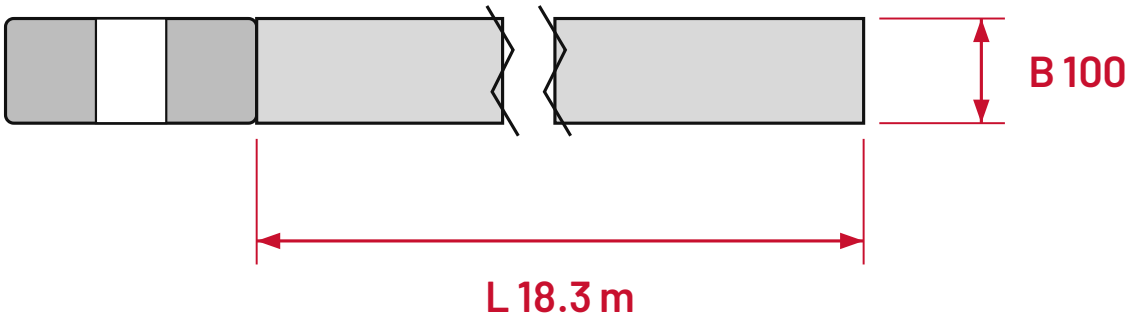

mm

B Overall width **L** Length
All dimensions in mm

AVAILABLE VERSIONS

Item no. · Weight

Colour / Width	100 mm
Black	H3427N-100mm
Yellow	H3427Y-100mm
Yellow/Black	H3427D-100mm